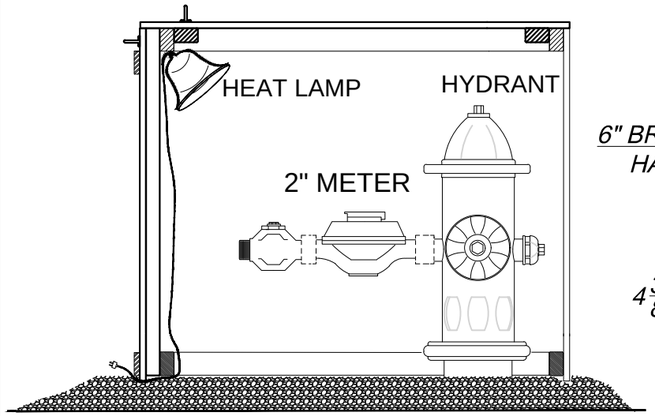

SECTION THRU BOX
(WITHOUT INSULATION)

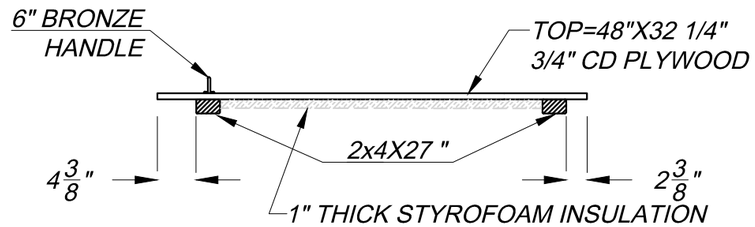

REMOVABLE LIFT-OFF TOP

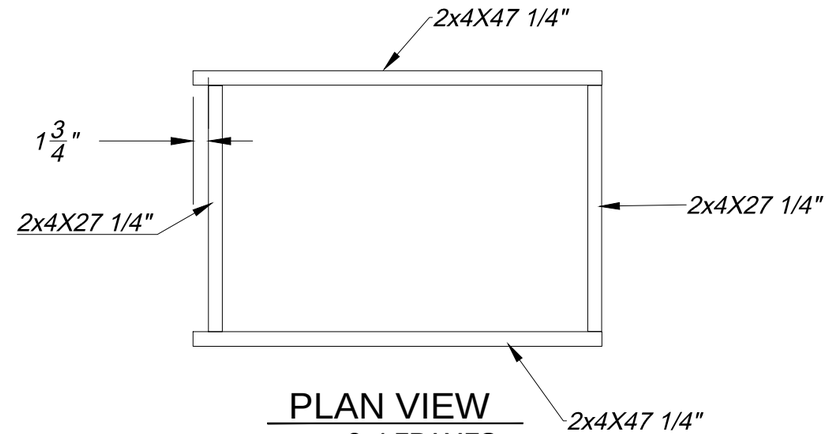

PLAN VIEW
2x4 FRAMES
(2 REQ'D.)

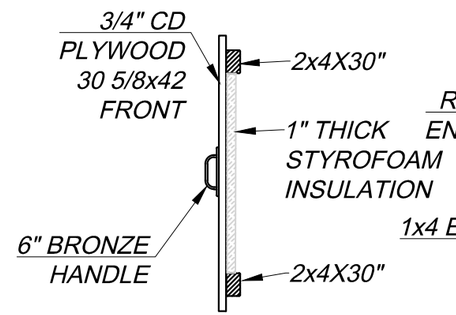

PLAN VIEW
(REMOVABLE LIFT-OUT END SECTION)

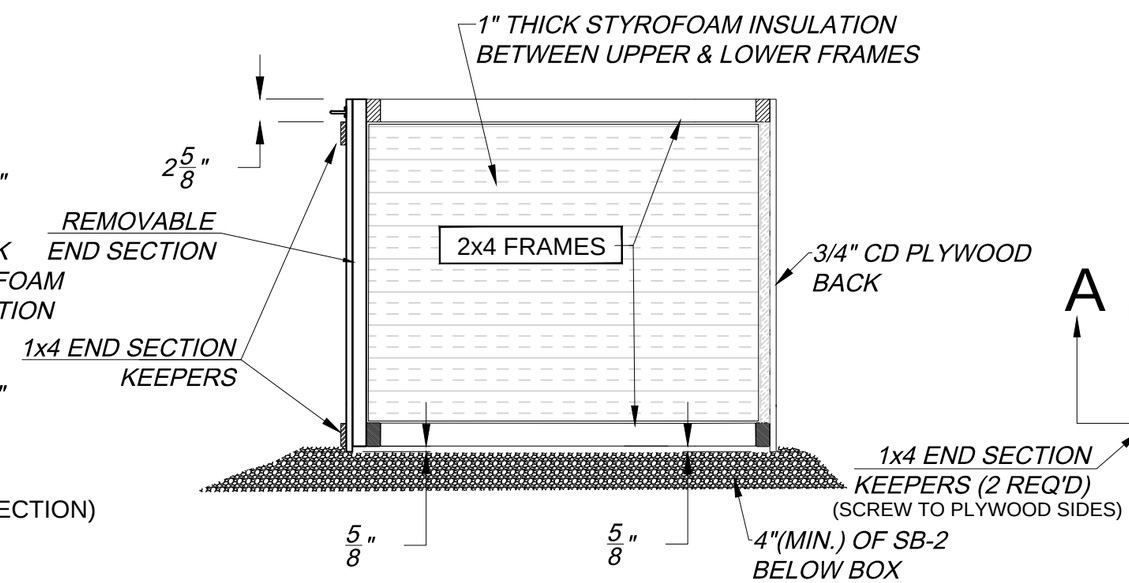

SECTION A-A
(WITHOUT TOP LID)

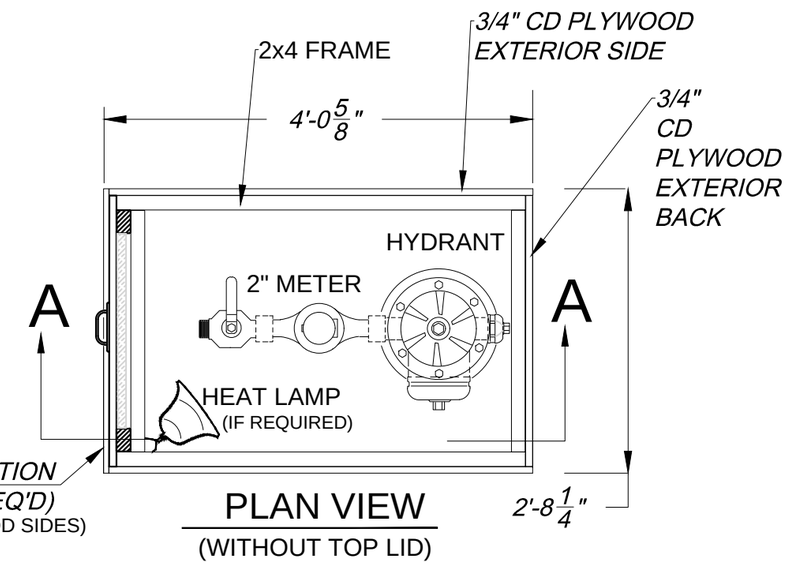

PLAN VIEW
(WITHOUT TOP LID)

FASTENERS

1. 2x4 FRAMES-3" LONG DECK SCREWS
2. EXTERIOR PLYWOOD -1 1/2" LONG #8 WOOD SCREWS
3. INSULATION TO PLYWOOD-1 1/2" LONG #8 WOOD SCREWS
4. PLYWOOD TO 2x4 STIFFENERS-1 1/2" LONG #8 WOOD SCREWS
5. 1x2 KEEPERS TO EXTERIOR PLYWOOD-1 1/2" LONG #8 WOOD SCREWS

REVISIONS
DATE: BY: REASON:

HYDRANT HOT HOUSE
FOR HYDRANT AND METER

TITLE: STANDARD HYDRANT & METER HOT HOUSE
JOB NO.: GENERAL
PLAN NO.:
DRAWN BY: LRS
CHECKED BY: RP
DATE: 11-24-14

SPRINGDALE, AR 72765-0769
526 OAK ST. P.O. BOX
769 (479) 751-5751

Springdale WATER UTILITIES

1/2